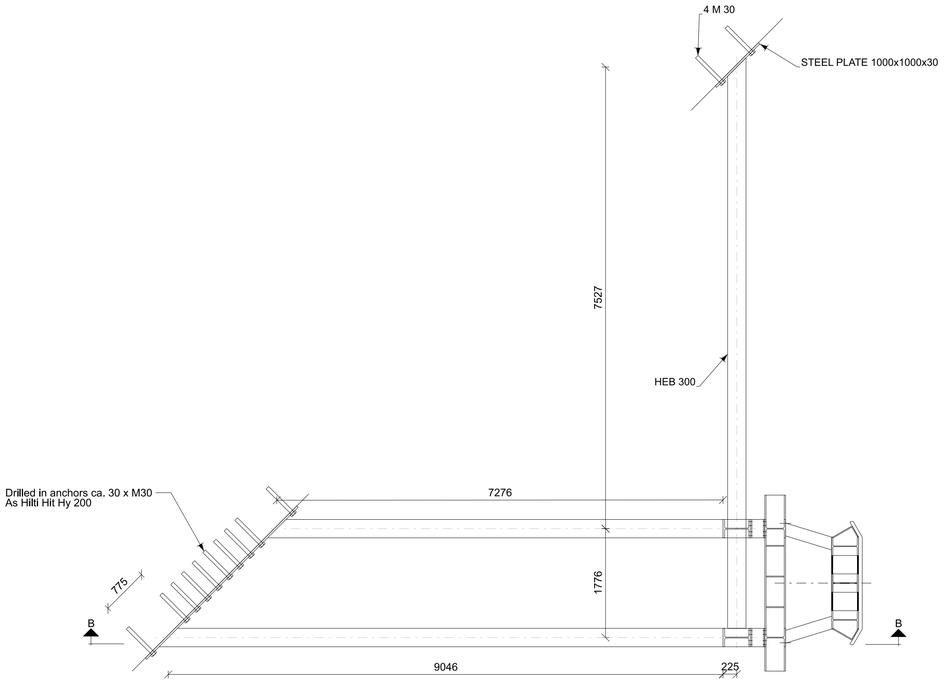


PLAN, 1:50

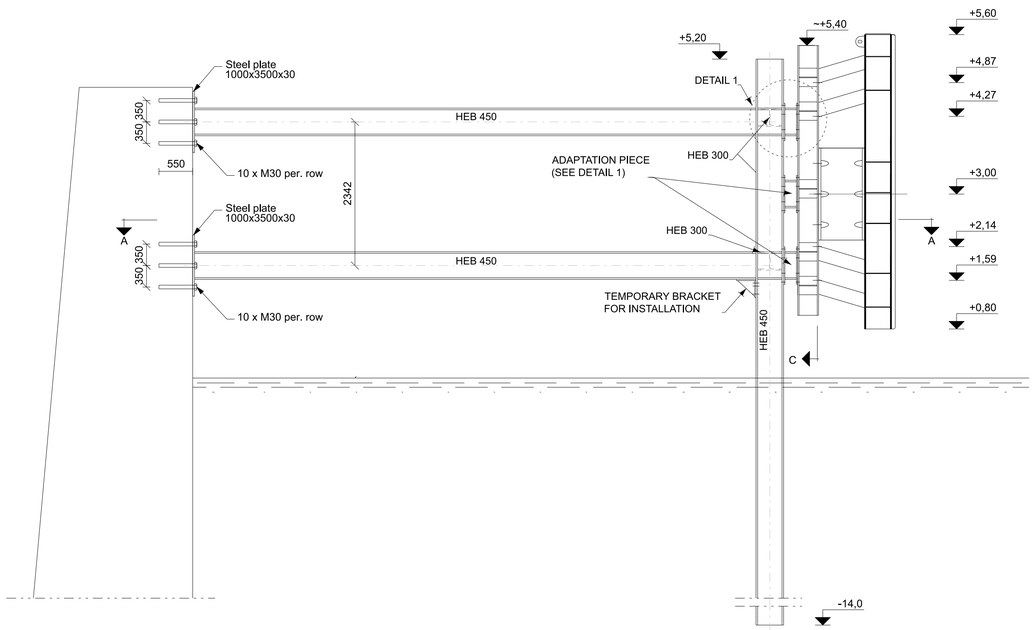


SECTION A-A, 1:50

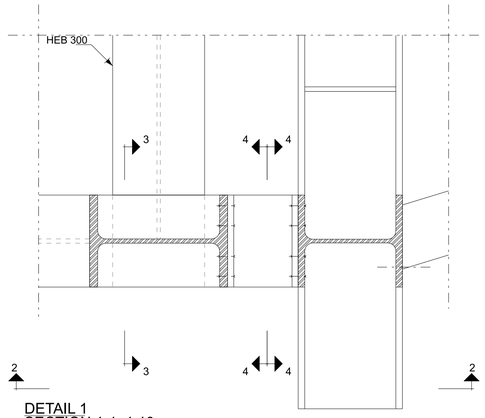


DETAIL 1
SECTION 1-1, 1:10

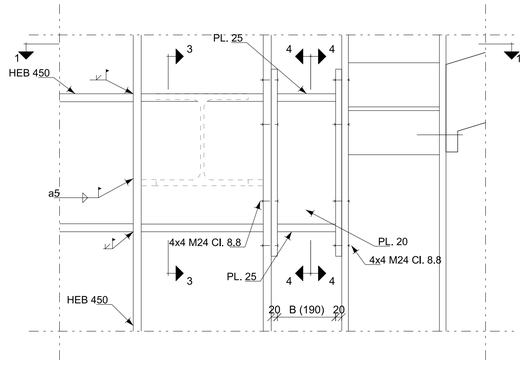


(*) LENGTH B TO BE ADJUSTED BASED ON
THE FINAL POSITION OF THE STRUCTURE

DETAIL 1
SECTION 2-2, 1:10

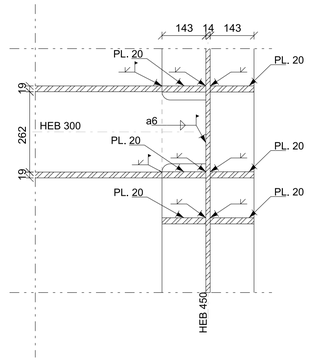


DETAIL 1
SECTION 3-3, 1:10

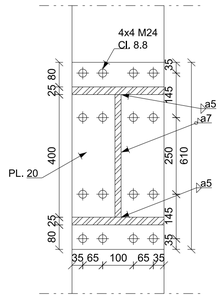


DETAIL 1
SECTION 4-4, 1:10

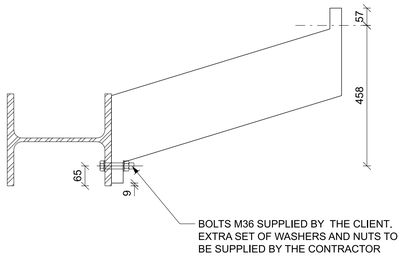


DETAIL 1 - FENDER CONNECTION (TYP.) 1:10

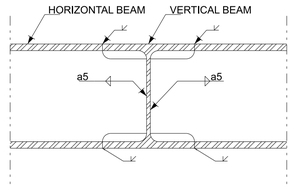


SECTION D-D
VERTICAL BEAM TO HORIZONTAL BEAM CONNECTION (TYP.)
1:10

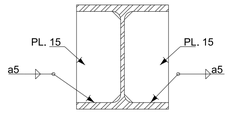


SECTION E-E
TRANSVERSE STIFFENER (TYP.) 1:10

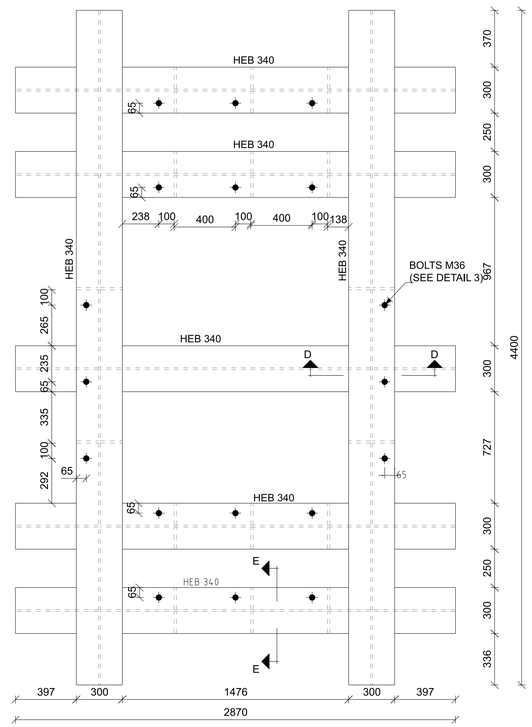


SECTION C-C (MOUNTING FRAME), 1:20

SWE-1-31

## NOTE:

All dimensions are in mm
Elevations are in m DVR90
Coordinat system in DKTM 3

All construction steel is S355J0
All reinforcement is B550, fyk = 550MPa

Adaptionpiece incl. mounting bolt is indicative,
since the size depends on installation precision.

The Client will deliver template for mounting of fender bolts.

More details regarding mounting of the fenders
can be seen in Appendix 12 to TS.

Tolerance for piles' erection +/- 100mm.

A geometrical survey shall be carried out prior
to installing the mounting frame
and adaptation pieces in order to determine the
verticality of piles and their position.

Installation procedure and typology of adaptation
pieces to be agreed with the Client based on the
outcome of the geometrical survey.

## SIGNATURE:

Bolts placing

## REFERENCES:

SWE-1-01 For plan over Berth 1

| Revision/Text | Desig./Drawn | Controlled | Approved | Date |
|---|---|---|---|---|

| Designed/Drawn | Controlled | Approved | |
|---|---|---|---|
| SEKA | THJO | HENH | |
| Project no. | Scale | Date | Page |
| 23.0510.21 | 1:50; 20; 10 | 2022-06-27 | |

Rødby Ferry Port Reconstruction PR24

SWECO

PR24
Layup Berth
Pieners sections and plan

Drawing no.
SWE-1-31

PRINT DATE: 2022-06-27 CADFILE:E:\ks_working\dr\95073\361632_39\SWE-1-31.dgn